Project: 5245-02-72 STH 23 - Darlington, County Shop Road to Minerva Street, Lafayette County

2021: STH 23 reconstruction from River Street to Minerva Street (Stages 1-4)

2022: STH 23 reconstruction from County Shop Road to River Street (Stage 5)

STAGE 1	STAGE 2	STAGE 3	STAGE 4	STAGE 5
Schedule: 2021: Late March thru Late April North of the Bridge: - no on-street parking allowed on STH 23/Main St - traffic maintained each direction - construct temporary asphalt widening for SB traffic between Cornelia St and Harriet St South of the Bridge: - traffic maintained by flagging operations - construct River St / CTH F intersection	Schedule: 2021: Late April thru Late July Traffic: - both lanes of Main St traffic shifted to the SB side from the bridge to CTH F / Harriet St - one way traffic access over the bridge controlled by temporary traffic signal - side streets intersecting on the east side of Main St CLOSED to thru traffic Construction: - construct east half of the bridge - construct NB STH 23 / Main St from the bridge to CTH F /Harriet St - construct Main St / CTH F intersection under flagging operation	Schedule: 2021: Late July thru Late October Traffic: - both lanes of Main St traffic shifted to the new NB side from the bridge to CTH F / Harriet St - one way traffic access over the bridge controlled by temporary traffic signal - side streets intersecting on the west side of Main St CLOSED to thru traffic - ROAD CLOSED to thru traffic on STH 23 from the CTH F intersection to Minerva St Construction: - construct west half of the bridge - construct SB STH 23 / Main St from the bridge to Minerva St	Schedule: 2021: Late October thru Mid-November Traffic: - traffic maintained both directions Construction: - remove temp widening on NB STH 23 / Main St between Cornelia St to Harriet St and construct permanent curb and pavement	Schedule: 2022: April thru Early October Traffic: - ROAD CLOSED to thru traffic on STH 23 / Galena St from County Shop Rd to River St / CTH F intersection Construction: - Construct STH 23 / Galena St from County Shop Rd to River St / CTH F intersection in 6 phases based on block length restrictions

2

STA 6'NB'+77 - STA 16'NB'+05
ROADWAY CROWN CORRECTION

BUENA VISTA DRIVE

UNION GROVE LANE

MINOR ROADWAY REALIGNMENT
UNION GROVE LANE
CENTER HILL ROAD

RETAINING WALLS
STA 21'NB'+25 - STA 28'NB'+77
4' HEIGHT NOR.
5' HEIGHT MAX.

END RESURFACING LIMITS
BEGIN RECONSTRUCTION LIMITS
STA 16'NB'+05

HUNTINGTON COURT

MINOR ROADWAY REALIGNMENT
HUNTINGTON COURT
SOUTH LEG

HUNTINGTON COURT

BEGIN PROJECT 5245-02-72
STA 6'NB'+56
BEGIN RESURFACING LIMITS

BEGIN PROJECT 5245-02-75
BEGIN WATER AND SANITARY UTILITIES

CENTER HILL ROAD

COUNTY SHOP ROAD

KENNEDY DRIVE

STH 81
STH 23
STH 23/81
2'NB'
4'NB'
6'NB'
8'NB'
10'NB'
12'NB'
14'NB'
16'NB'
18'NB'
20'NB'
22'NB'
24'NB'
26'NB'
28'NB'
30'NB'
8'BV'
8'UG'
8'CH'

CORNELIA STREET

LOUISA STREET

RAVINE STREET

HUNTINGTON COURT

MINOR ROADWAY REALIGNMENT
HUNTINGTON COURT
NORTH LEG

RETAINING WALLS
STA 33'NB'+18 - STA 40'NB'+83
4' HEIGHT NOR.

ANN STREET

CORNELIA STREET

WISCONSIN STREET

ALICE STREET

CTH F

DO NOT DISTURB -
BRONZE DISK 1T02,
STA 51'NB'+96
35.7' LT.

ANN STREET

ALICE STREET

HILL STREET

END B-33-0007 SUPERSTRUCTURE REPLACEMENT LIMITS
BEGIN PAVEMENT REPLACEMENT LIMITS
STA 29'BR'+67.62

RIVER STREET

END RECONSTRUCTION LIMITS
BEGIN B-33-0007 SUPERSTRUCTURE REPLACEMENT LIMITS
STA 29'BR'+20.37

STH 81
STH 23
STH 23/81
STH 23 SB
STH 23 NB
STH 23 SB/81 WB
STH 23 NB/81 EB
32'NB
34'NB
36'NB'
38'NB
40'NB
42'NB
44'NB
46'NB
48'NB
50'NB'
52'SB'
52'NB'
54'SB
54'NB
56'SB'
56'NB'
58'SB'
58'NB'
60'SB'
60'NB'
62'SB'
62'NB'
64'SB'
64'NB'
8'WIS'
8'CTF'
10'NB'
BR 52'SB'
WELLS STREET
OHIO STREET

PROJECT NO: 5245-02-72	HWY: STH 23	COUNTY: LAFAYETTE	PROJECT OVERVIEW	SHEET 4	E

FILE NAME : X:\PROJECTS\LAFAYETTE\5245-02-02 STH 23\DESIGN\C3D\SHEETSPLAN\5245-02-72\020201-PO.DWG
LAYOUT NAME - 020201-poA
PLOT DATE : 5/19/2020 10:59 AM
PLOT BY : BOB WILSON
PLOT NAME :
PLOT SCALE : 1 IN:200 FT

WISDOT/CADDS SHEET 44

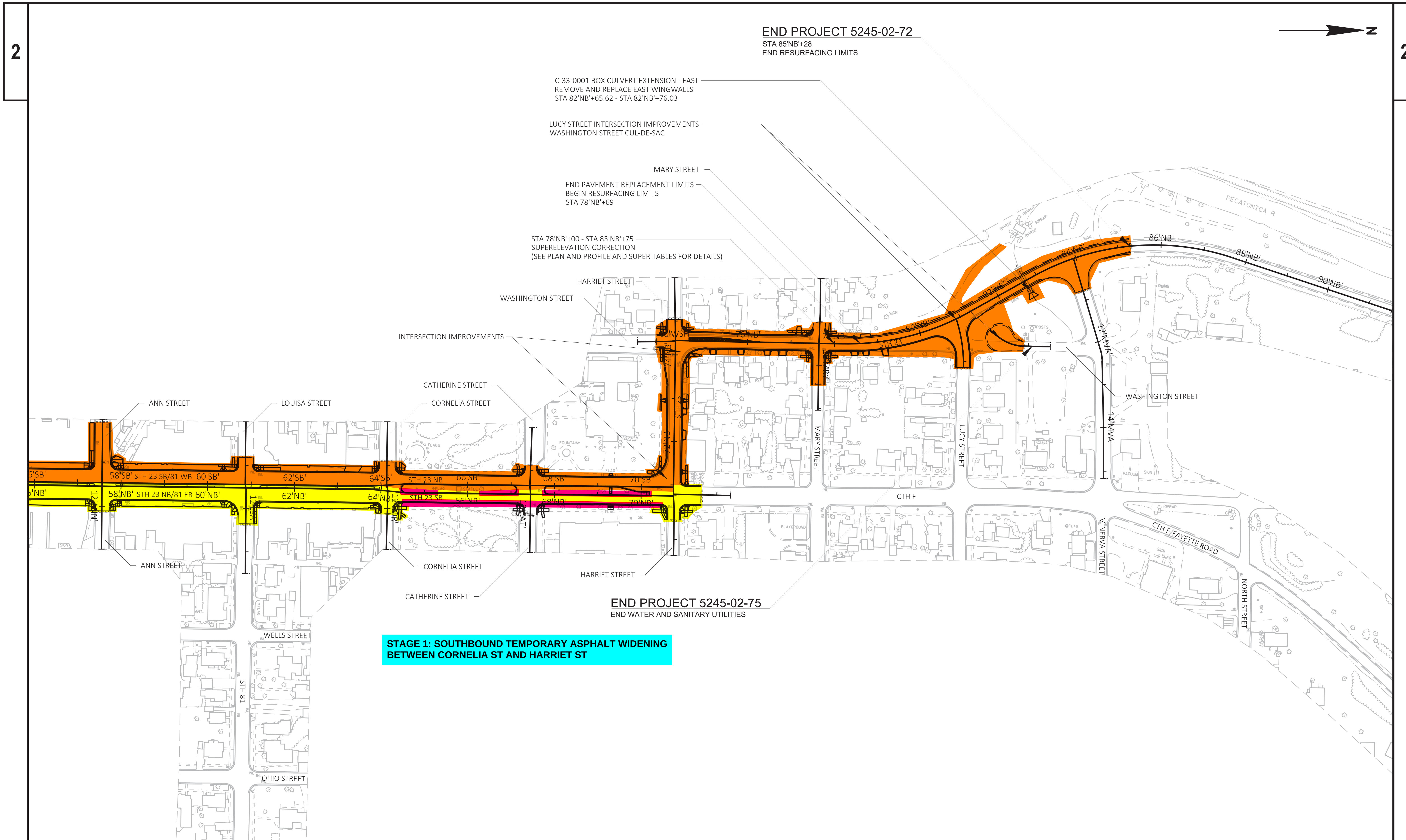

PROJECT NO: 5245-02-72	HWY: STH 23	COUNTY: LAFAYETTE	PROJECT OVERVIEW	SHEET 5	E

FILE NAME : X:\PROJECTS\LAFAYETTE\5245-02-02 STH 23\DESIGN\C3D\SHEETSPLAN\5245-02-72\020201-PO.DWG
LAYOUT NAME - 020201-poB
PLOT DATE : 5/19/2020 10:59 AM PLOT BY : BOB WILSON PLOT NAME : PLOT SCALE : 1 IN:200 FT
WISDOT/CADDS SHEET 42

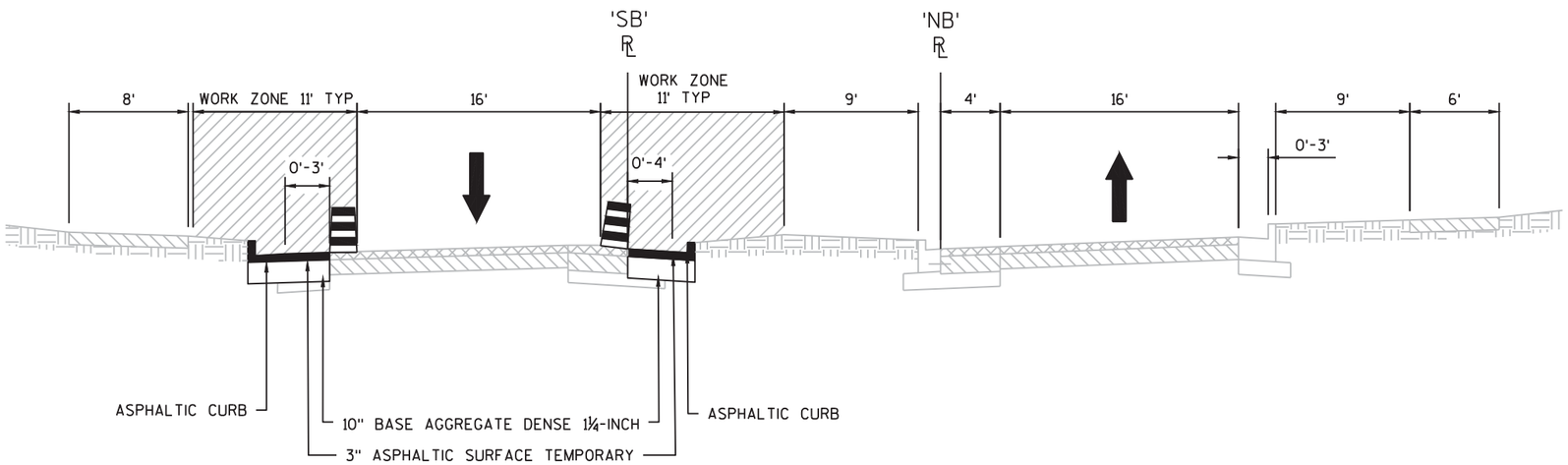

STA 64'SB'+88 TO STA 66'SB'+72

STA 64'SB'+41 TO STA 67'SB'+12
STA 67'SB'+76 TO STA 69'SB'+67

STAGE 1

STA 64'NB'+40 TO STA 70'NB'+70
STA 64'SB'+40 TO STA 70'SB'+70

STAGE 1: SOUTHBOUND TEMPORARY ASPHALT WIDENING BETWEEN CORNELIA ST AND HARRIET ST

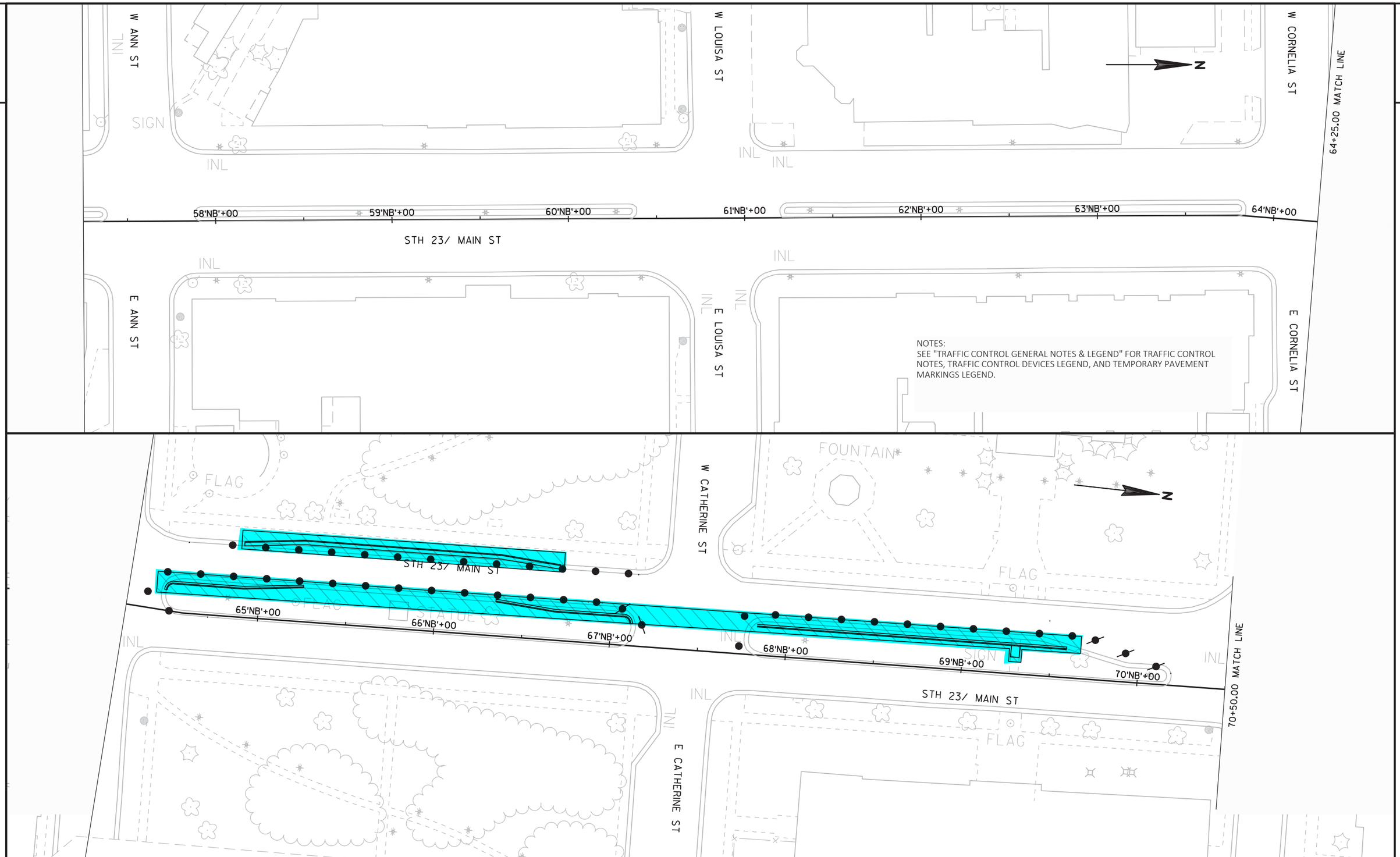

PROJECT NO: 5245-02-72	HWY: STH 23	COUNTY: LAFAYETTE	TRAFFIC CONTROL - STAGE 1	SHEET 283	E

FILE NAME : X:\PROJECTS\LAFAYETTE\5245-02-02 STH 23\DESIGN\C3D\SHEETSPLAN\5245-02-72\026101-S1.DWG
LAYOUT NAME - 026005 - s1
PLOT DATE : 6/10/2020 6:43 PM PLOT BY : BOB WILSON PLOT NAME : PLOT SCALE : 1 IN:50 FT
WISDOT/CADDS SHEET 44

2

WISCONSIN ST

W RIVER ST/ CTH F

50+25.00 MATCH LINE

WORK TO BE COMPLETED UNDER FLAGGING OPERATION. SEE S.D.D 15C12 TRAFFIC CONTROL FOR LANE CLOSURE WITH FLAGGING OPERATION

CONNECT PROPOSED STORM SEWER PIPE TO EXISTING PIPE CONCRETE COLLAR REQ'D

44'NB'+00 45'NB'+00 46'NB'+00 47'NB'+00 STH 23/81 48'NB'+00 49'NB'+00 50'NB'+00

INL

R11-2
48" X 30"

ROAD CLOSED

TYPE III BARRICADE

SEE SDD 15C03 BARRICADES AND SIGNS FOR SIDE ROAD CLOSURES

E RIVER ST

NOTES:
SEE SDD 15C12 TRAFFIC CONTROL FOR LANE CLOSURE WITH FLAGGING OPERATION FOR DAYTIME FLAGGING.

SEE "TRAFFIC CONTROL GENERAL NOTES & LEGEND" FOR TRAFFIC CONTROL NOTES, TRAFFIC CONTROL DEVICES LEGEND, AND TEMPORARY PAVEMENT MARKINGS LEGEND.

PECATONICA

SIGN

W ALICE ST

57+25.00 MATCH LINE

51'NB'+00 52'NB'+00 53'NB'+00 54'NB'+00 55'NB'+00 56'NB'+00 57'NB'+00

STH 23/81

STH 23/ MAIN ST

CANOPY

FILLER CAP

E ALICE ST

2

PROJECT NO: 5245-02-72	HWY: STH 23	COUNTY: LAFAYETTE	TRAFFIC CONTROL - STAGE 1	SHEET 282	E

FILE NAME : X:\PROJECTS\LAFAYETTE\5245-02-02 STH 23\DESIGN\C3D\SHEETSPLAN\5245-02-72\026101-S1.DWG
LAYOUT NAME - 026004 - s1
PLOT DATE : 6/10/2020 6:43 PM PLOT BY : BOB WILSON PLOT NAME : PLOT SCALE : 1 IN:50 FT

WISDOT/CADDS SHEET 44

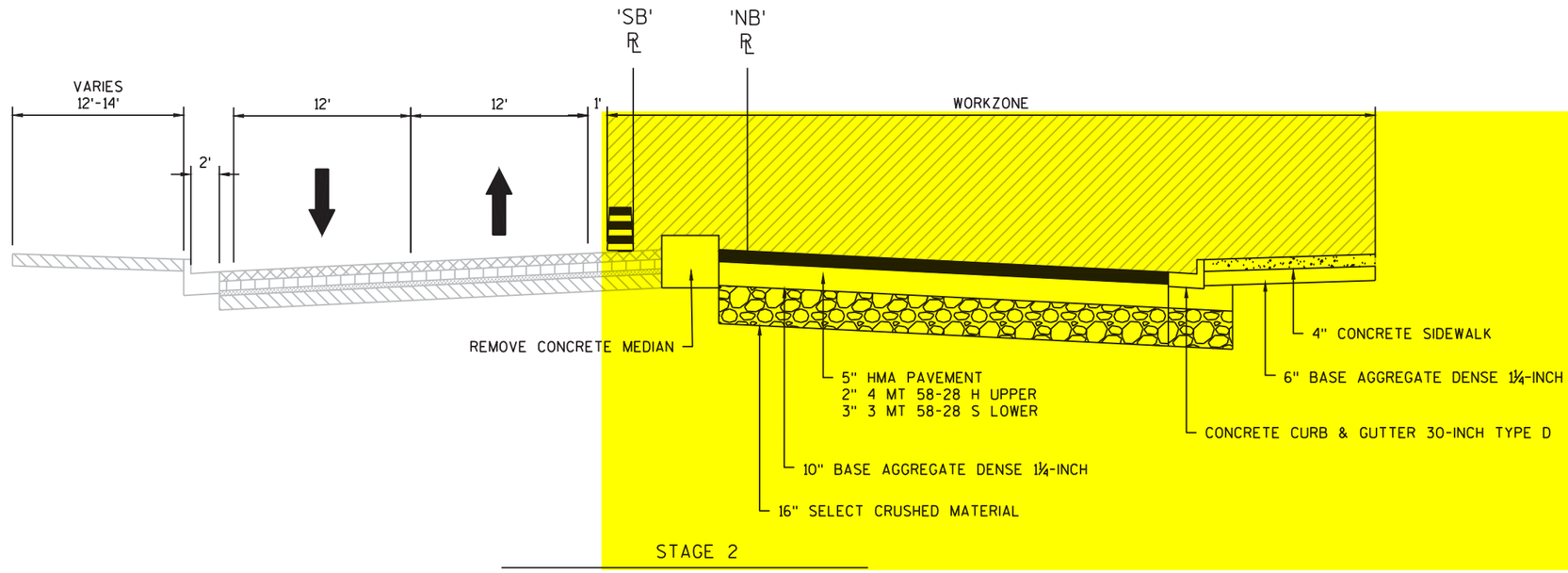

BRIDGE TO CORNELIA STREET

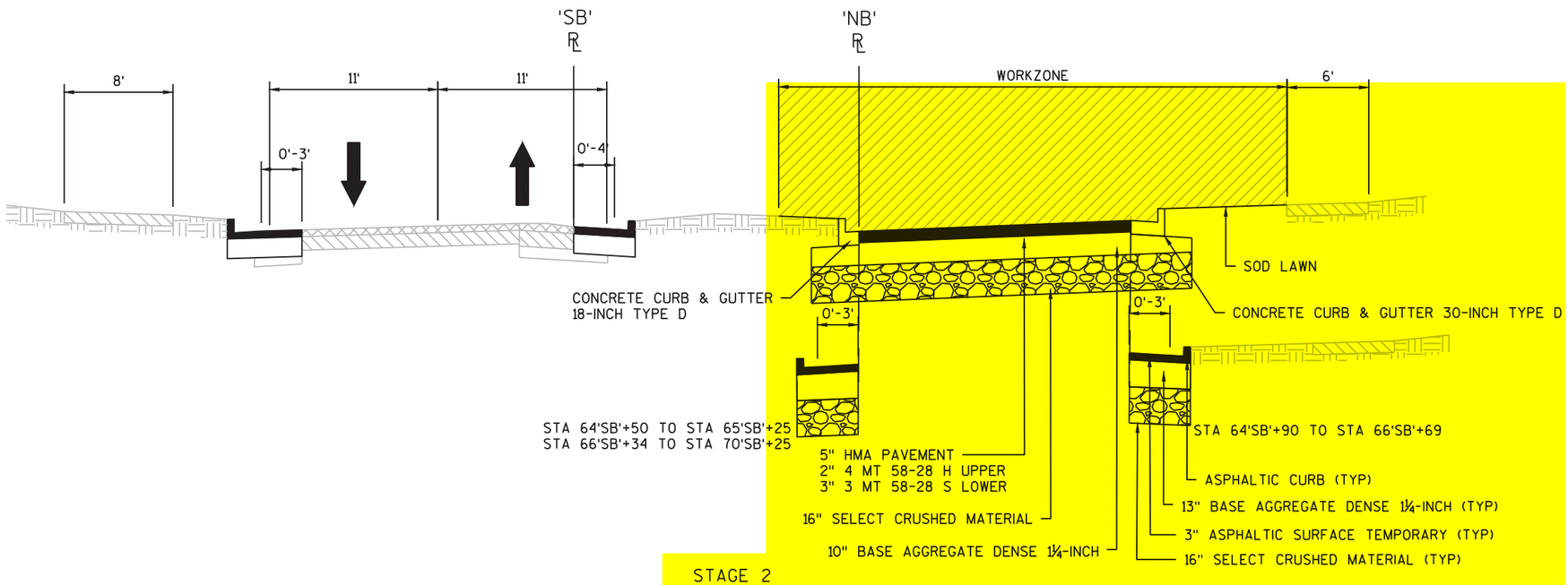

CORNELIA STREET TO HARRIET STREET

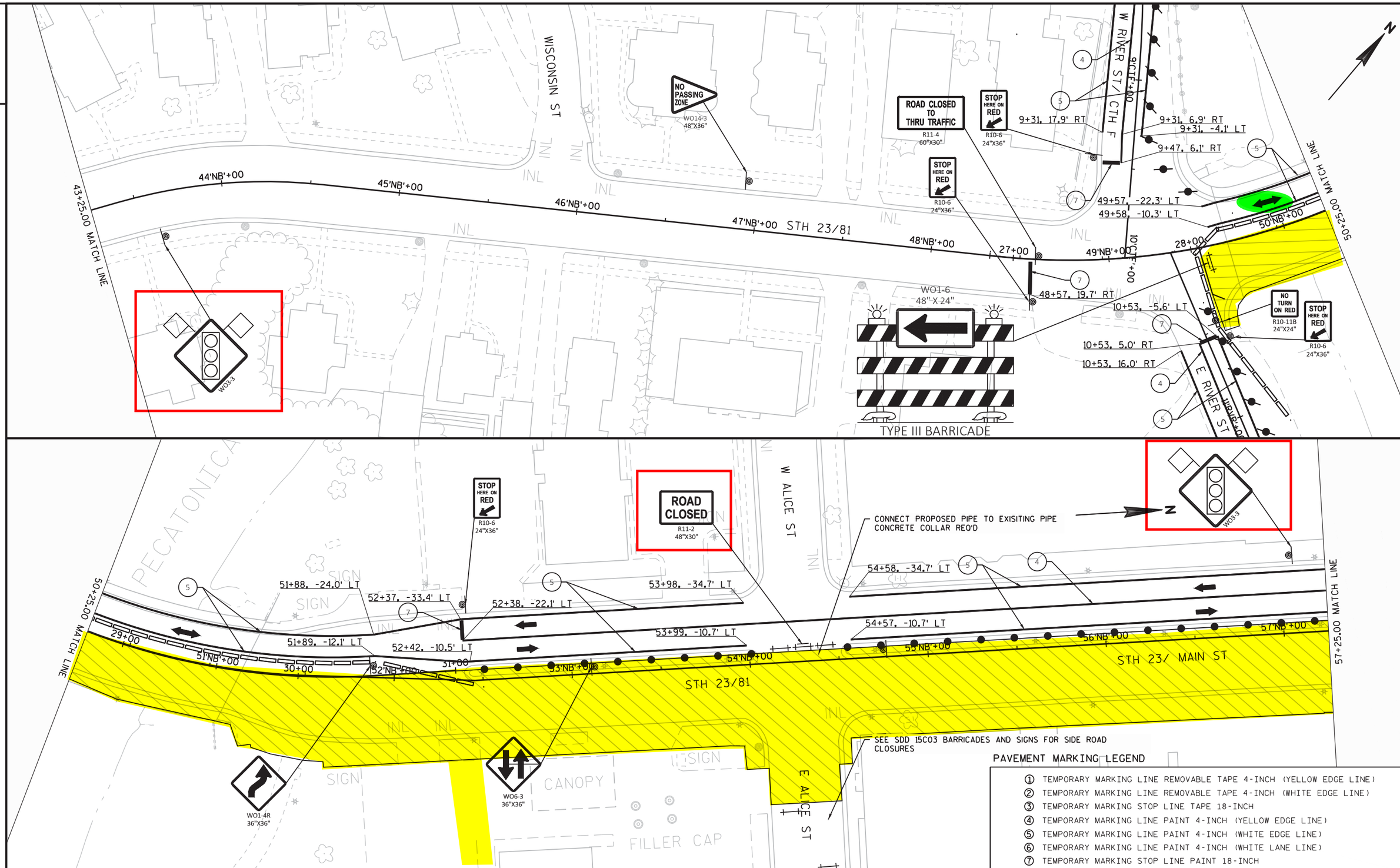

PAVEMENT MARKING LEGEND

1. TEMPORARY MARKING LINE REMOVABLE TAPE 4-INCH (YELLOW EDGE LINE)
2. TEMPORARY MARKING LINE REMOVABLE TAPE 4-INCH (WHITE EDGE LINE)
3. TEMPORARY MARKING STOP LINE TAPE 18-INCH
4. TEMPORARY MARKING LINE PAINT 4-INCH (YELLOW EDGE LINE)
5. TEMPORARY MARKING LINE PAINT 4-INCH (WHITE EDGE LINE)
6. TEMPORARY MARKING LINE PAINT 4-INCH (WHITE LANE LINE)
7. TEMPORARY MARKING STOP LINE PAINT 18-INCH

PROJECT NO: 5245-02-72	HWY: STH 23	COUNTY: LAFAYETTE	TRAFFIC CONTROL - STAGE 2	SHEET 287	E

FILE NAME : X:\PROJECTS\LAFAYETTE\5245-02-02 STH 23\DESIGN\C3D\SHEETSPLAN\5245-02-72\026101-S2.DWG
LAYOUT NAME - 026004 - s2
PLOT DATE : 7/31/2020 10:01 AM PLOT BY : BRAD GROH PLOT NAME : PLOT SCALE : 1 IN:50 FT

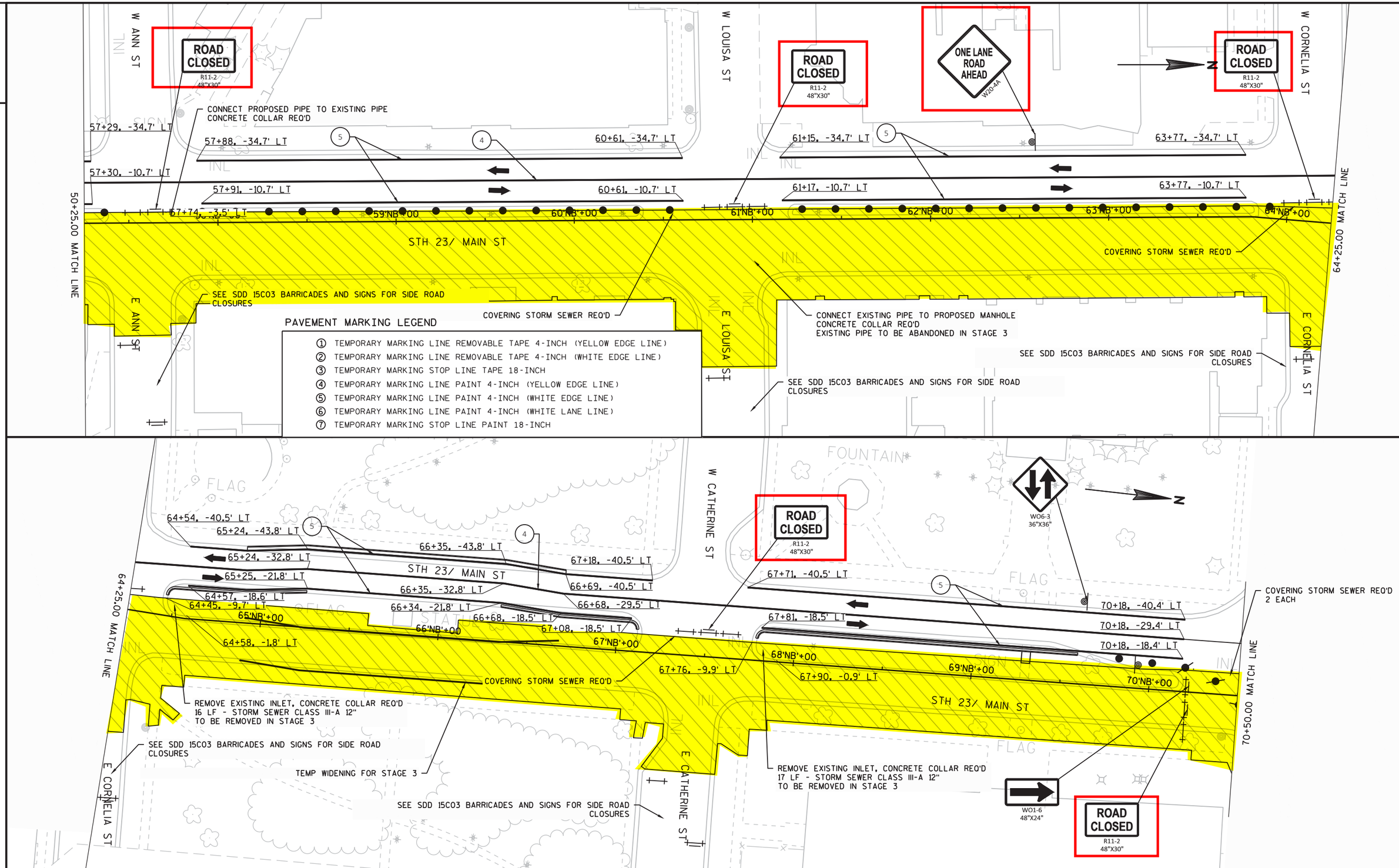

PROJECT NO: 5245-02-72	HWY: STH 23	COUNTY: LAFAYETTE	TRAFFIC CONTROL - STAGE 2	SHEET 288	E

FILE NAME : X:\PROJECTS\LAFAYETTE\5245-02-02 STH 23\DESIGN\C3D\SHEETSPLAN\5245-02-72\026101-S2.DWG
LAYOUT NAME - 026005 - s2
PLOT DATE : 7/29/2020 4:28 PM PLOT BY : JEDIDIAH MUNROE PLOT NAME : PLOT SCALE : 1 IN:50 FT

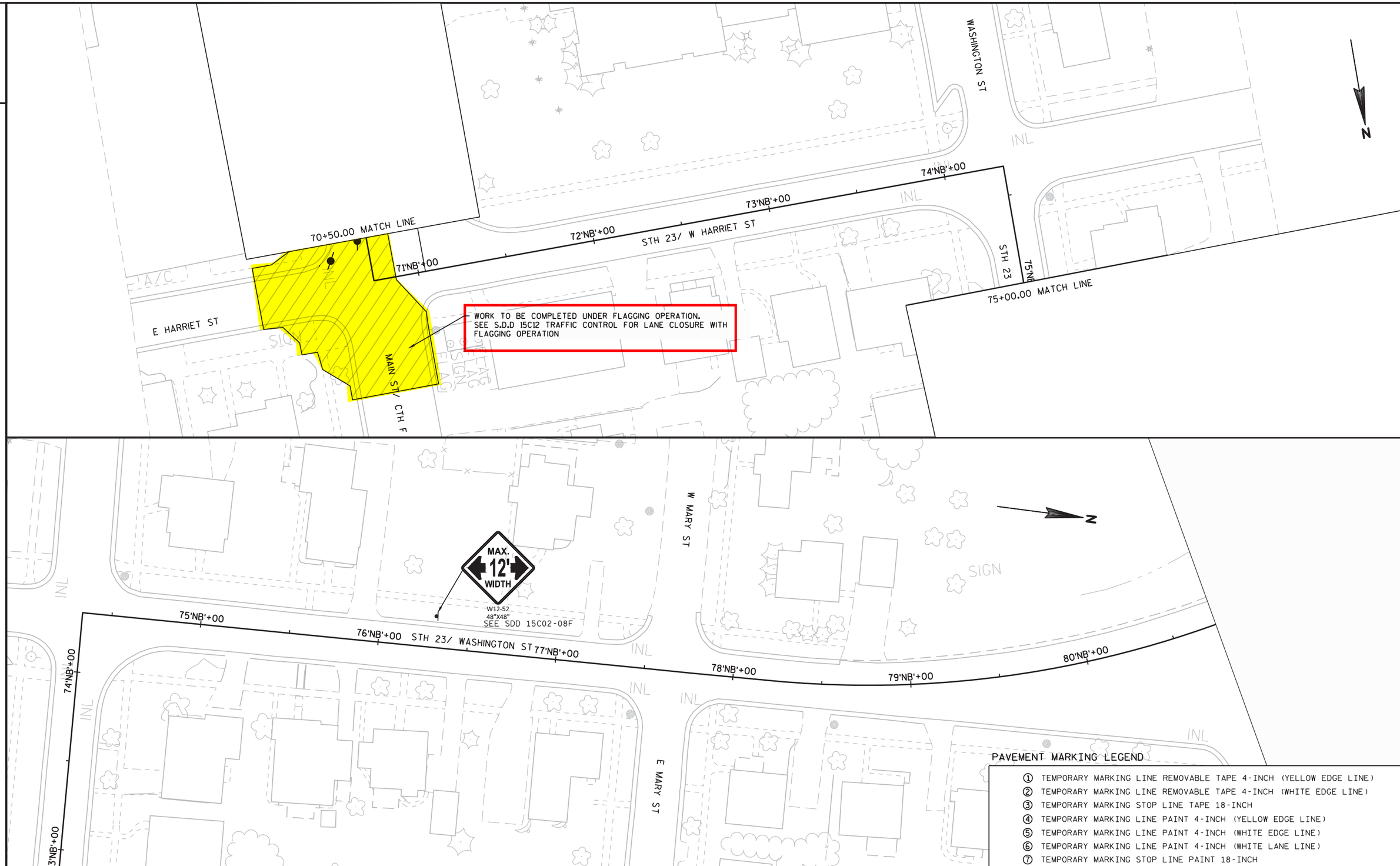

PAVEMENT MARKING LEGEND

1. TEMPORARY MARKING LINE REMOVABLE TAPE 4-INCH (YELLOW EDGE LINE)
2. TEMPORARY MARKING LINE REMOVABLE TAPE 4-INCH (WHITE EDGE LINE)
3. TEMPORARY MARKING STOP LINE TAPE 18-INCH
4. TEMPORARY MARKING LINE PAINT 4-INCH (YELLOW EDGE LINE)
5. TEMPORARY MARKING LINE PAINT 4-INCH (WHITE EDGE LINE)
6. TEMPORARY MARKING LINE PAINT 4-INCH (WHITE LANE LINE)
7. TEMPORARY MARKING STOP LINE PAINT 18-INCH

PROJECT NO: 5245-02-72	HWY: STH 23	COUNTY: LAFAYETTE	TRAFFIC CONTROL - STAGE 2	SHEET 289	E

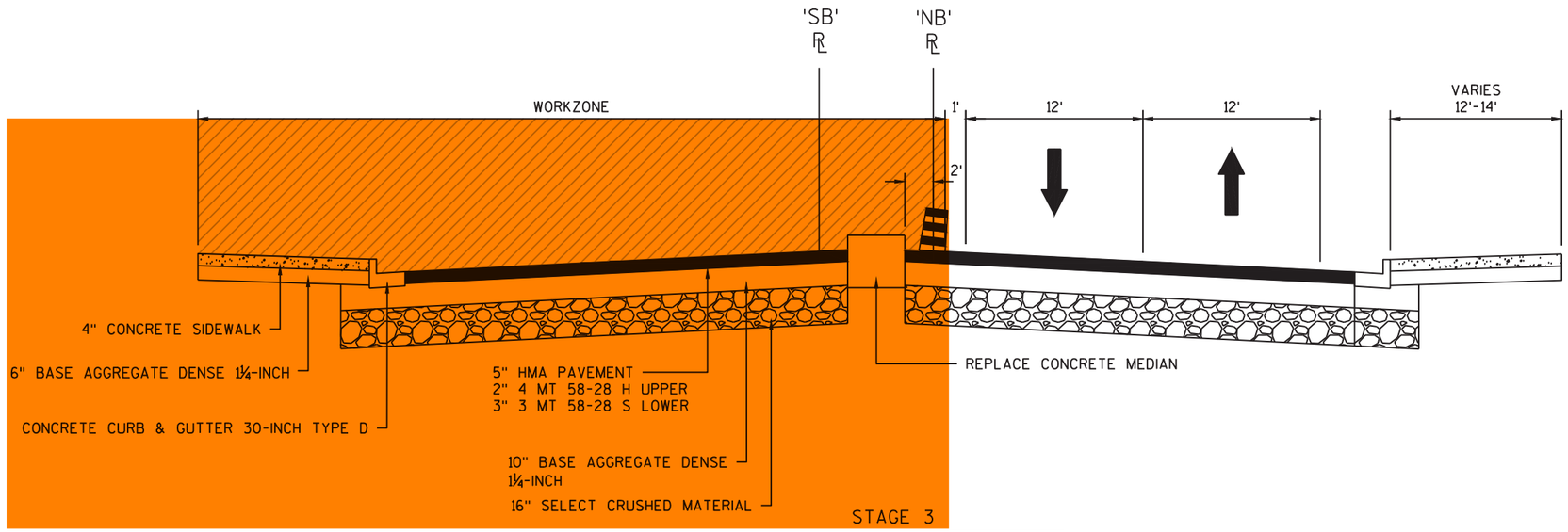

BRIDGE TO CORNELIA STREET

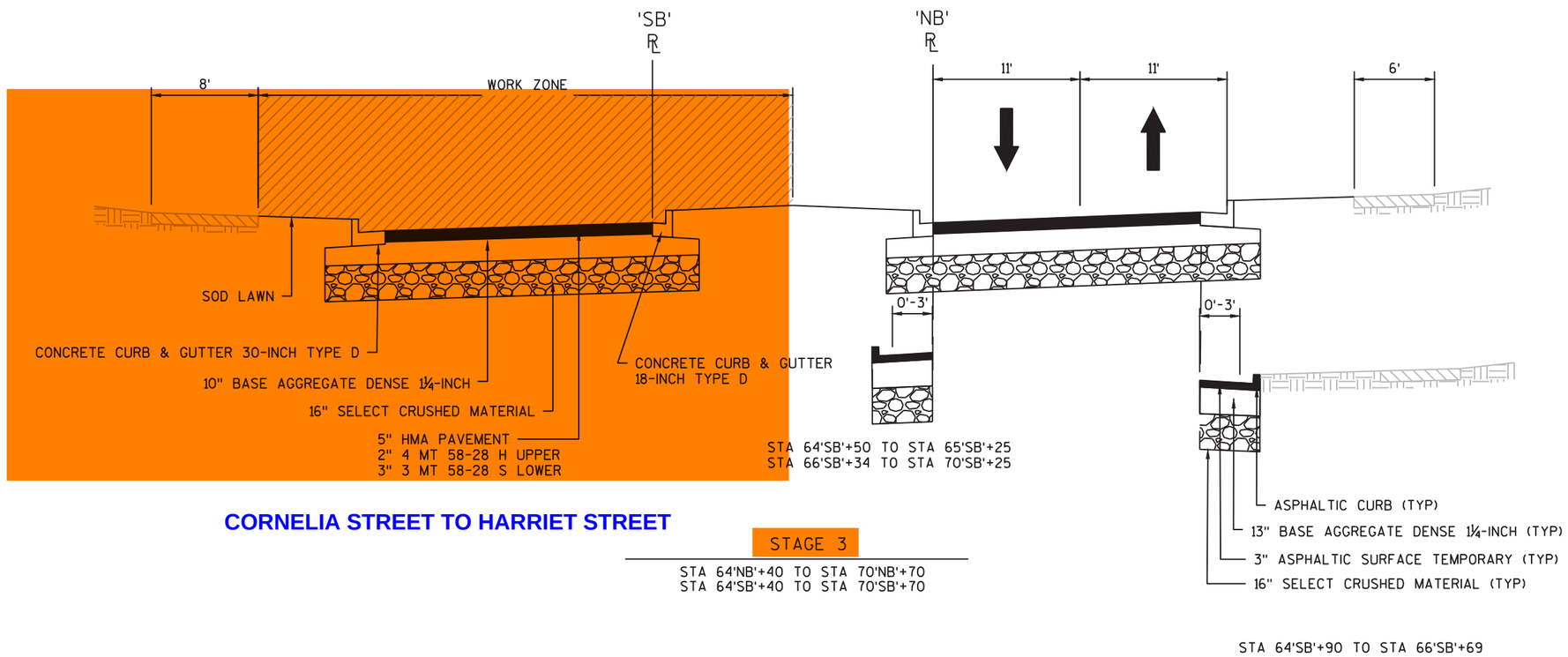

CORNELIA STREET TO HARRIET STREET

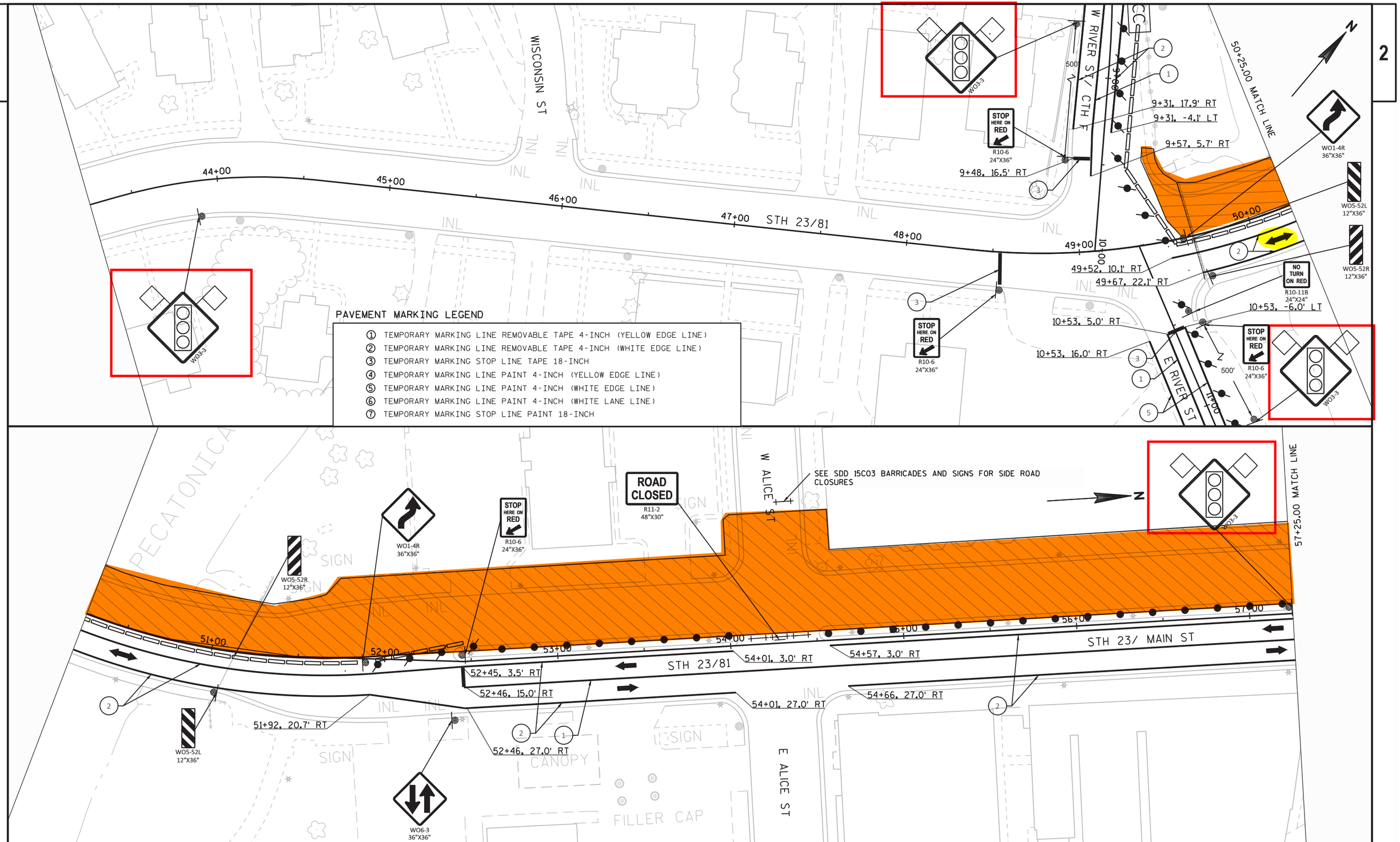
WISCONSIN ST
W RIVER ST/ CTH F
E RIVER ST
STH 23/81
44+00
45+00
46+00
47+00
48+00
49+00
50+00
50+25.00 MATCH LINE
9+31, 17.9' RT
9+31, -4.1' LT
9+57, 5.7' RT
9+48, 16.5' RT
49+52, 10.1' RT
49+67, 22.1' RT
10+53, -6.0' LT
10+53, 5.0' RT
10+53, 16.0' RT
STOP HERE ON RED
R10-6
24"X36"
NO TURN ON RED
R10-11B
24"X24"
WO1-4R
36"X36"
WO5-52L
12"X36"
WO5-52R
12"X36"
WO3-3
PAVEMENT MARKING LEGEND
① TEMPORARY MARKING LINE REMOVABLE TAPE 4-INCH (YELLOW EDGE LINE)
② TEMPORARY MARKING LINE REMOVABLE TAPE 4-INCH (WHITE EDGE LINE)
③ TEMPORARY MARKING STOP LINE TAPE 18-INCH
④ TEMPORARY MARKING LINE PAINT 4-INCH (YELLOW EDGE LINE)
⑤ TEMPORARY MARKING LINE PAINT 4-INCH (WHITE EDGE LINE)
⑥ TEMPORARY MARKING LINE PAINT 4-INCH (WHITE LANE LINE)
⑦ TEMPORARY MARKING STOP LINE PAINT 18-INCH
ROAD CLOSED
R11-2
48"X30"
SEE SDD 15C03 BARRICADES AND SIGNS FOR SIDE ROAD CLOSURES
W ALICE ST
E ALICE ST
57+25.00 MATCH LINE
STH 23/ MAIN ST
51+00
52+00
53+00
54+00
55+00
56+00
57+00
52+45, 3.5' RT
52+46, 15.0' RT
52+46, 27.0' RT
51+92, 20.7' RT
54+01, 3.0' RT
54+57, 3.0' RT
54+01, 27.0' RT
54+66, 27.0' RT
WO6-3
36"X36"
PECATONICA
SIGN
CANOPY
FILLER CAP

2

SEE SDD 15C03 BARRICADES AND SIGNS FOR SIDE ROAD CLOSURES

W ANN ST

W LOUISA ST

W CORNELIA ST

64+25.00 MATCH LINE

W06-3
36"X36"

58+00 59+00 60+00 61+00 62+00 63+00 64+00

57+92, 3.0' RT

STH 23/ MAIN ST

60+36, 3.0' RT

61+24, 3.0' RT

63+79, 3.0' RT

63+79, 15.0' RT

63+82, 27.0' RT

57+89, 27.0' RT

60+43, 27.0' RT

61+18, 27.0' RT

E ANN ST

E LOUISA ST

E CORNELIA ST

57+25.00 MATCH LINE

ROAD CLOSED
R11-2
48"X30"

ROAD CLOSED 1000 FT
W20-3C

MAX. 12' WIDTH
W12-52
48"X48"

SEE SDD 15C02-08F FOR SIGN PLACEMENT

PAVEMENT MARKING LEGEND

1. TEMPORARY MARKING LINE REMOVABLE TAPE 4-INCH (YELLOW EDGE LINE)
2. TEMPORARY MARKING LINE REMOVABLE TAPE 4-INCH (WHITE EDGE LINE)
3. TEMPORARY MARKING STOP LINE TAPE 18-INCH
4. TEMPORARY MARKING LINE PAINT 4-INCH (YELLOW EDGE LINE)
5. TEMPORARY MARKING LINE PAINT 4-INCH (WHITE EDGE LINE)
6. TEMPORARY MARKING LINE PAINT 4-INCH (WHITE LANE LINE)
7. TEMPORARY MARKING STOP LINE PAINT 18-INCH

FLAGS

FLAG

FOUNTAIN

W CATHERINE ST

STH 23/ MAIN ST

70+50.00 MATCH LINE

64+50, -2.4' LT

64+91, -3.0' LT

65+00 65+25, 0.2' RT

64+90, 9.0' RT

65+24, 12.2' RT

66+00

66+34, 0.2' RT

67+00

66+68, -3.0' LT

68+00

65+24, 24.2' RT

66+35, 12.2' RT

66+68, 9.0' RT

64+51, 9.6' RT

64+52, 21.6' RT

64+90, 21.0' RT

66+35, 24.2' RT

66+69, 21.0' RT

69+00

70+00

70+58, 2

E CATHERINE ST

4+25.00 MATCH LINE

ROAD CLOSED 500 FT
W20-3D

PROJECT NO: 5245-02-72	HWY: STH 23	COUNTY: LAFAYETTE	TRAFFIC CONTROL - STAGE 3	SHEET 293	E

FILE NAME : X:\PROJECTS\LAFAYETTE\5245-02-02 STH 23\DESIGN\C3D\SHEETSPLAN\5245-02-72\026101-S3.DWG
LAYOUT NAME - 026005 - s3
PLOT DATE : 7/29/2020 3:42 PM PLOT BY : JEDIDIAH MUNROE PLOT NAME : PLOT SCALE : 1 IN:50 FT

WISDOT/CADDS SHEET 44

2

COURT HOUSE

ROAD CLOSED
R11-2
48"X30"

SEE SDD 15C03 BARRICADES AND SIGNS FOR SIDE ROAD CLOSURES

WASHINGTON ST

N

70+50.00 MATCH LINE

70+58. 21.0' RT

70+58. 9.0' RT

71+00

72+00

73+00

74+00

75

STH 23/ W HARRIET ST

STH 23

75+00.00 MATCH LINE

E HARRIET ST

ROAD CLOSED 500 FT
W20-3D

MAIN ST/ CTH F

WO1-6
48" X 24"

TYPE III BARRICADE

PAVEMENT MARKING LEGEND

1. TEMPORARY MARKING LINE REMOVABLE TAPE 4-INCH (YELLOW EDGE LINE)
2. TEMPORARY MARKING LINE REMOVABLE TAPE 4-INCH (WHITE EDGE LINE)
3. TEMPORARY MARKING STOP LINE TAPE 18-INCH
4. TEMPORARY MARKING LINE PAINT 4-INCH (YELLOW EDGE LINE)
5. TEMPORARY MARKING LINE PAINT 4-INCH (WHITE EDGE LINE)
6. TEMPORARY MARKING LINE PAINT 4-INCH (WHITE LANE LINE)
7. TEMPORARY MARKING STOP LINE PAINT 18-INCH

SEE SDD 15C03 BARRICADES AND SIGNS FOR SIDE ROAD CLOSURES

W MARY ST

SEE SDD 15C03 BARRICADES AND SIGNS FOR SIDE ROAD CLOSURES

N

80+75.00 MATCH LINE

75+00

76+00

STH 23/ WASHINGTON ST

77+00

78+00

79+00

80+00

74+00

73+00

E MARY ST

SEE SDD 15C03 BARRICADES AND SIGNS FOR SIDE ROAD CLOSURES

SEE SDD 15C03 BARRICADES AND SIGNS FOR SIDE ROAD CLOSURES

PROJECT NO: 5245-02-72	HWY: STH 23	COUNTY: LAFAYETTE	TRAFFIC CONTROL - STAGE 3	SHEET 294	E

FILE NAME : X:\PROJECTS\LAFAYETTE\5245-02-02 STH 23\DESIGN\C3D\SHEETSPLAN\5245-02-72\026101-S3.DWG
LAYOUT NAME - 026006 - s3
PLOT DATE : 7/29/2020 3:42 PM PLOT BY : JEDIDIAH MUNROE PLOT NAME : PLOT SCALE : 1 IN:50 FT

WISDOT/CADDS SHEET 44

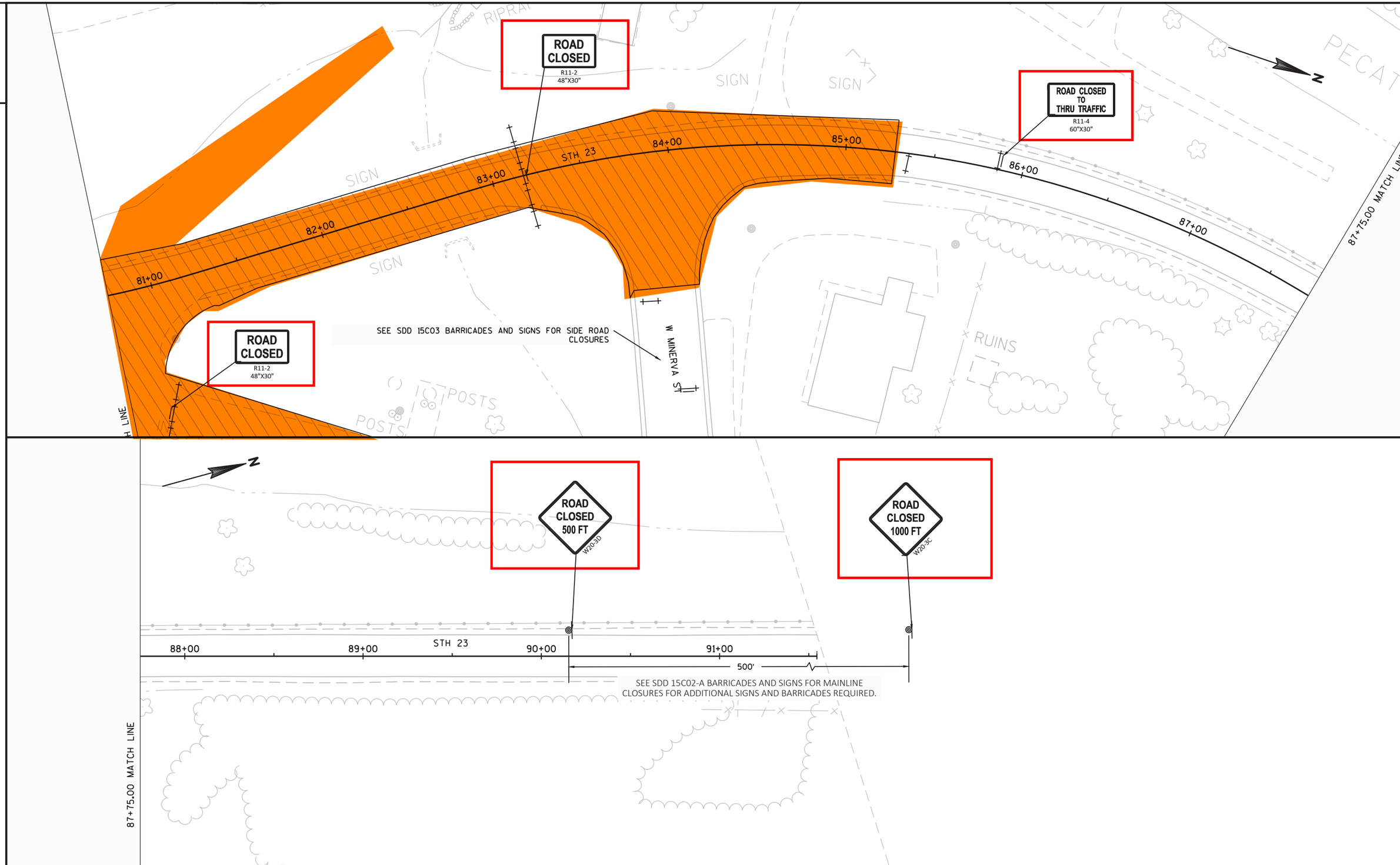
ROAD CLOSED
R11-2
48"X30"
ROAD CLOSED TO THRU TRAFFIC
R11-4
60"X30"
ROAD CLOSED
R11-2
48"X30"
SIGN
SIGN
SIGN
SIGN
RIPRAP
PECATO
RUINS
POSTS
POSTS
STH 23
81+00
82+00
83+00
84+00
85+00
86+00
87+00
87+75.00 MATCH LINE
SEE SDD 15C03 BARRICADES AND SIGNS FOR SIDE ROAD CLOSURES
W MINERVA ST
ROAD CLOSED 500 FT
W20-3D
ROAD CLOSED 1000 FT
W20-3C
STH 23
88+00
89+00
90+00
91+00
500'
SEE SDD 15C02-A BARRICADES AND SIGNS FOR MAINLINE CLOSURES FOR ADDITIONAL SIGNS AND BARRICADES REQUIRED.
87+75.00 MATCH LINE

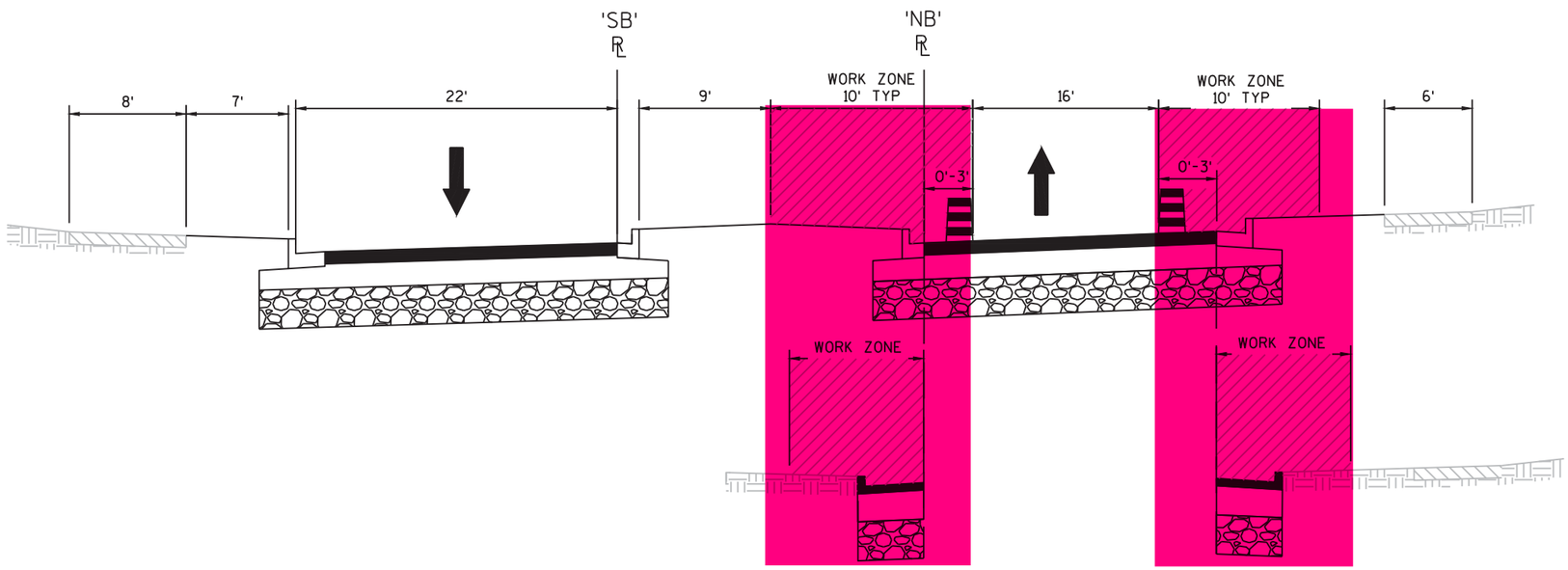

STA 64'SB'+50 TO STA 65'SB'+25
STA 66'SB'+34 TO STA 70'SB'+25

STA 64'SB'+90 TO STA 66'SB'+69

CORNELIA STREET TO HARRIET STREET

STAGE 4

STA 64'NB'+40 TO STA 70'NB'+70
STA 64'SB'+40 TO STA 70'SB'+70

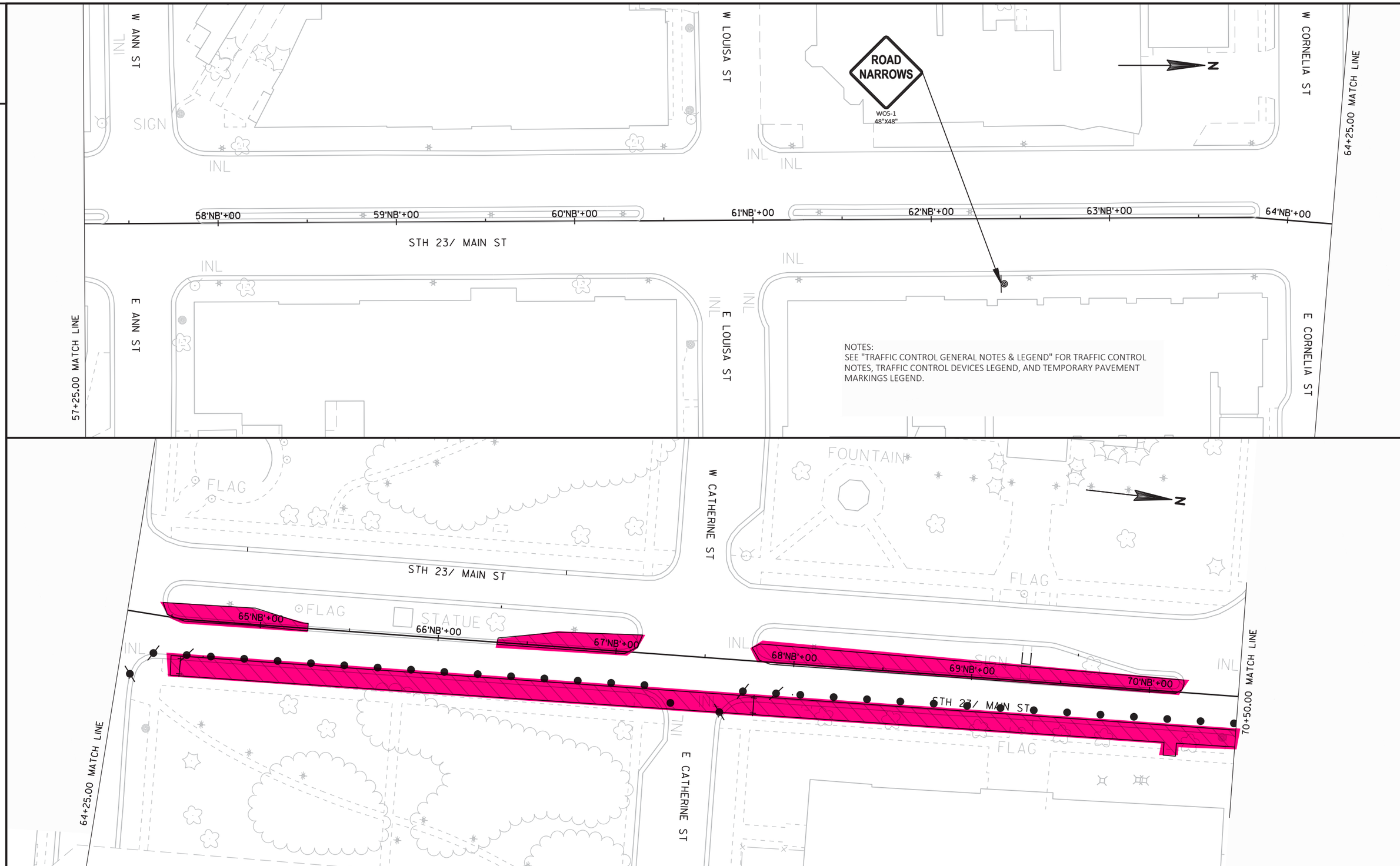

PROJECT NO: 5245-02-72	HWY: STH 23	COUNTY: LAFAYETTE	TRAFFIC CONTROL - STAGE 4	SHEET 297	E

FILE NAME : X:\PROJECTS\LAFAYETTE\5245-02-02 STH 23\DESIGN\C3D\SHEETSPLAN\5245-02-72\026101-S4.DWG
LAYOUT NAME - 026005 - s4
PLOT DATE : 7/29/2020 3:57 PM PLOT BY : JEDIDIAH MUNROE PLOT NAME : PLOT SCALE : 1 IN:50 FT
WISDOT/CADDS SHEET 44

NOTES:

1. SEE "TRAFFIC CONTROL GENERAL NOTES & LEGEND" FOR TRAFFIC CONTROL NOTES, TRAFFIC CONTROL DEVICES LEGEND, AND TEMPORARY PAVEMENT MARKINGS LEGEND.
2. SEE DETOUR PLANS FOR DETOUR SIGNING.
3. SEE SDD 15C2 BARRICADES AND SIGNS FOR MAINLINE CLOSURES FOR ADVANCED WARNING SIGNS FOR ROAD CLOSURE.

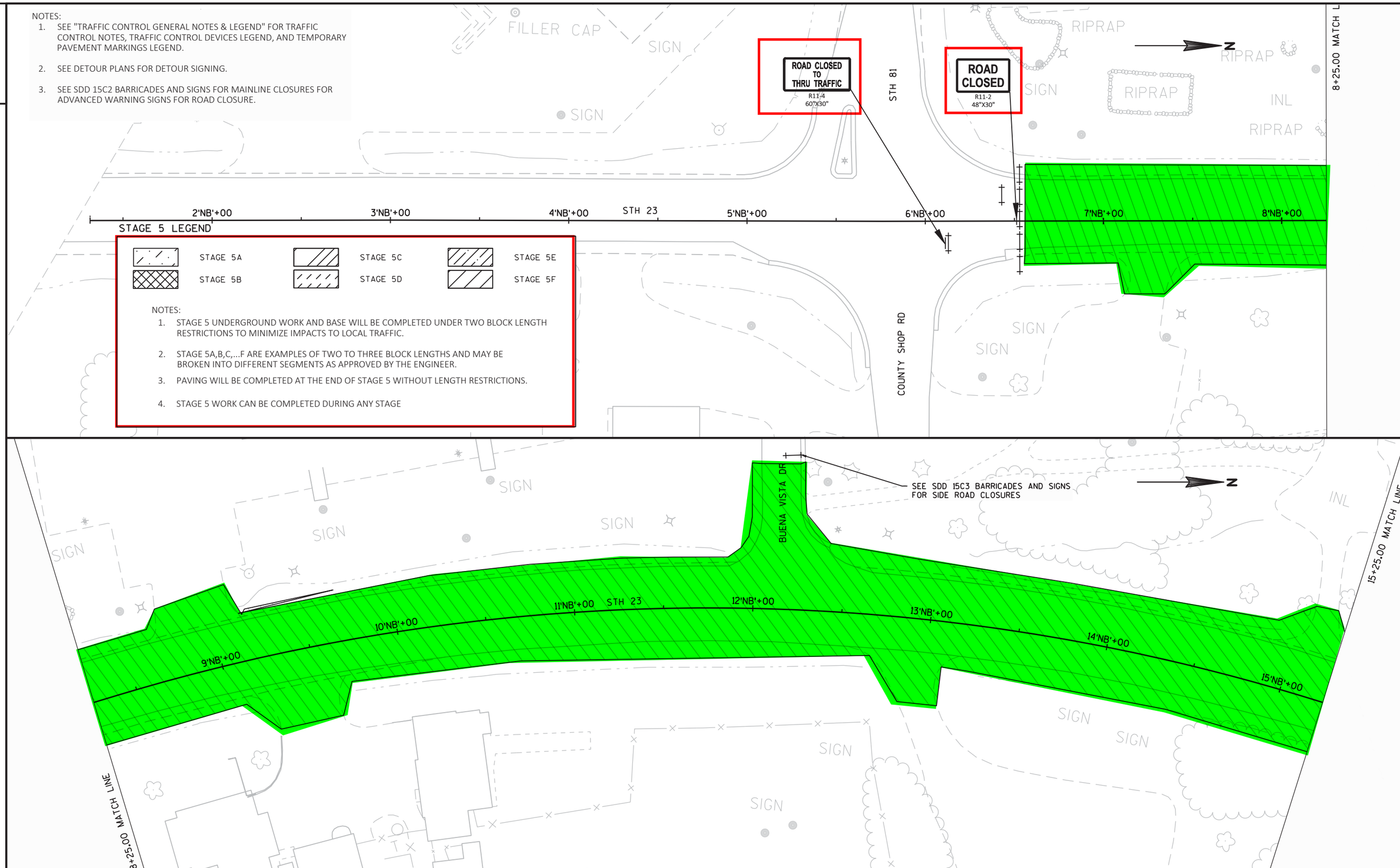

STAGE 5 LEGEND

STAGE 5A	STAGE 5C	STAGE 5E
STAGE 5B	STAGE 5D	STAGE 5F

NOTES:

1. STAGE 5 UNDERGROUND WORK AND BASE WILL BE COMPLETED UNDER TWO BLOCK LENGTH RESTRICTIONS TO MINIMIZE IMPACTS TO LOCAL TRAFFIC.
2. STAGE 5A,B,C,...F ARE EXAMPLES OF TWO TO THREE BLOCK LENGTHS AND MAY BE BROKEN INTO DIFFERENT SEGMENTS AS APPROVED BY THE ENGINEER.
3. PAVING WILL BE COMPLETED AT THE END OF STAGE 5 WITHOUT LENGTH RESTRICTIONS.
4. STAGE 5 WORK CAN BE COMPLETED DURING ANY STAGE

PROJECT NO: 5245-02-72	HWY: STH 23	COUNTY: LAFAYETTE	TRAFFIC CONTROL - STAGE 5	SHEET 299	E

FILE NAME : X:\PROJECTS\LAFAYETTE\5245-02-02 STH 23\DESIGN\C3D\SHEETSPLAN\5245-02-72\026101-S5.DWG
LAYOUT NAME - 026001 - s5
PLOT DATE : 7/9/2020 7:24 PM PLOT BY : JEDIDIAH MUNROE PLOT NAME : PLOT SCALE : 1 IN:50 FT
WISDOT/CADDS SHEET 44

2

NOTES:
SEE "TRAFFIC CONTROL GENERAL NOTES & LEGEND" FOR TRAFFIC CONTROL NOTES, TRAFFIC CONTROL DEVICES LEGEND, AND TEMPORARY PAVEMENT MARKINGS LEGEND.

PROJECT NO: 5245-02-72	HWY: STH 23	COUNTY: LAFAYETTE	TRAFFIC CONTROL - STAGE 5	SHEET 300	E

FILE NAME : X:\PROJECTS\LAFAYETTE\5245-02-02 STH 23\DESIGN\C3D\SHEETSPLAN\5245-02-72\026101-S5.DWG
LAYOUT NAME - 026002 - s5
PLOT DATE : 7/9/2020 7:24 PM PLOT BY : JEDIDIAH MUNROE PLOT NAME : PLOT SCALE : 1 IN:50 FT
WISDOT/CADDS SHEET 44

2

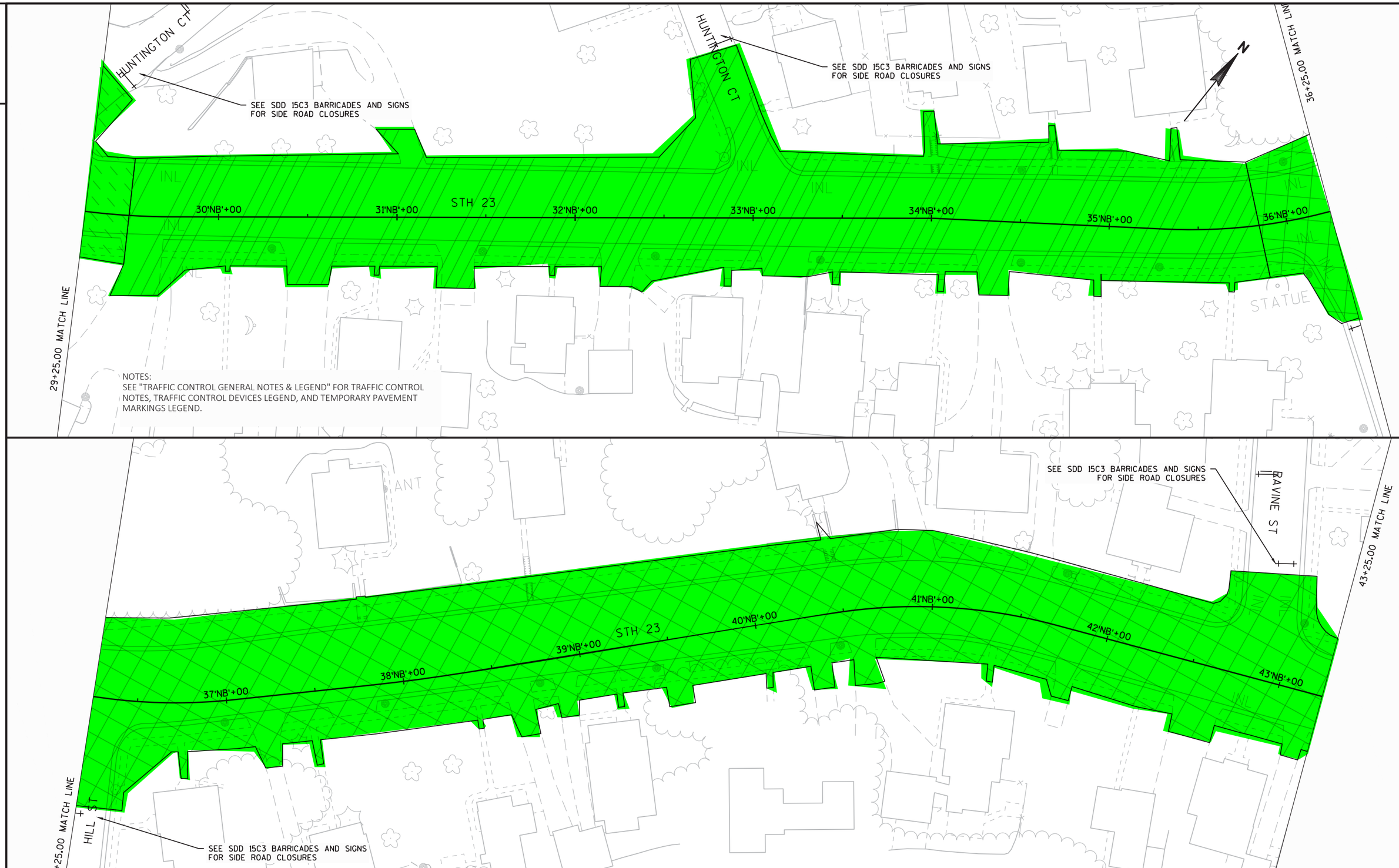

NOTES:
SEE "TRAFFIC CONTROL GENERAL NOTES & LEGEND" FOR TRAFFIC CONTROL NOTES, TRAFFIC CONTROL DEVICES LEGEND, AND TEMPORARY PAVEMENT MARKINGS LEGEND.

2

PROJECT NO: 5245-02-72	HWY: STH 23	COUNTY: LAFAYETTE	TRAFFIC CONTROL - STAGE 5	SHEET 301	E

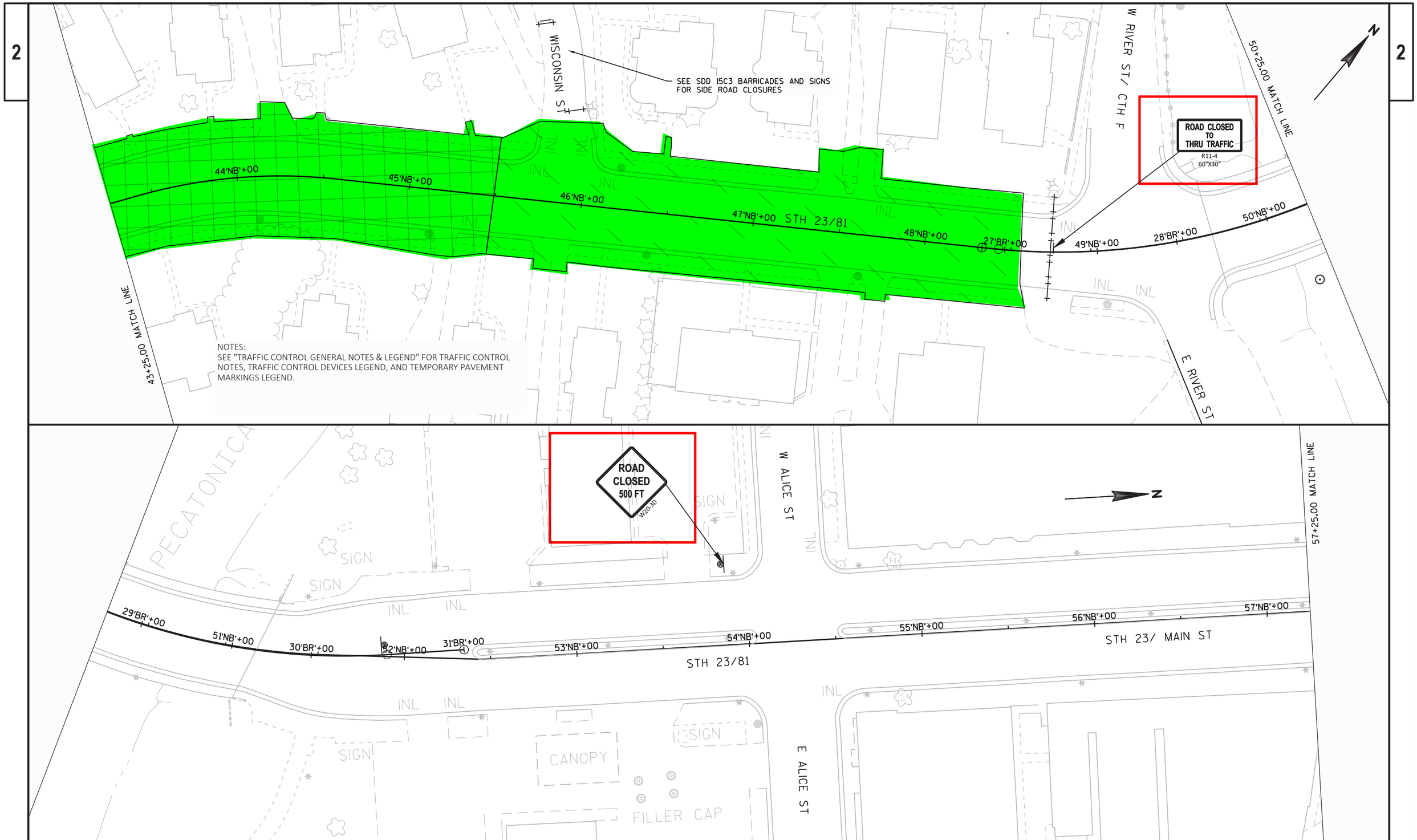

PROJECT NO: 5245-02-72	HWY: STH 23	COUNTY: LAFAYETTE	TRAFFIC CONTROL - STAGE 5	SHEET 302	E

FILE NAME : X:\PROJECTS\LAFAYETTE\5245-02-02 STH 23\DESIGN\C3D\SHEETSPLAN\5245-02-72\026101-S5.DWG
LAYOUT NAME - 026004 - s5
PLOT DATE : 7/9/2020 7:24 PM
PLOT BY : JEDIDIAH MUNROE
PLOT NAME :
PLOT SCALE : 1 IN:50 FT
WISDOT/CADDS SHEET 44